hertz
KOMPRESSOREN

IMPETUS

Double Stage Rotary Screw Air Compressor

22-110 kW

1,03-23,1 m³/min

22-110 kW

7,5-8,5-10-13 bar

IMPETUS SERIES

Oil Injected, Two-Stage, Direct Coupled, Fixed/Variable Speed

Rotary Screw Air Compressors

Next gen compact compressors maximize your energy saving, minimize your total cost of own.

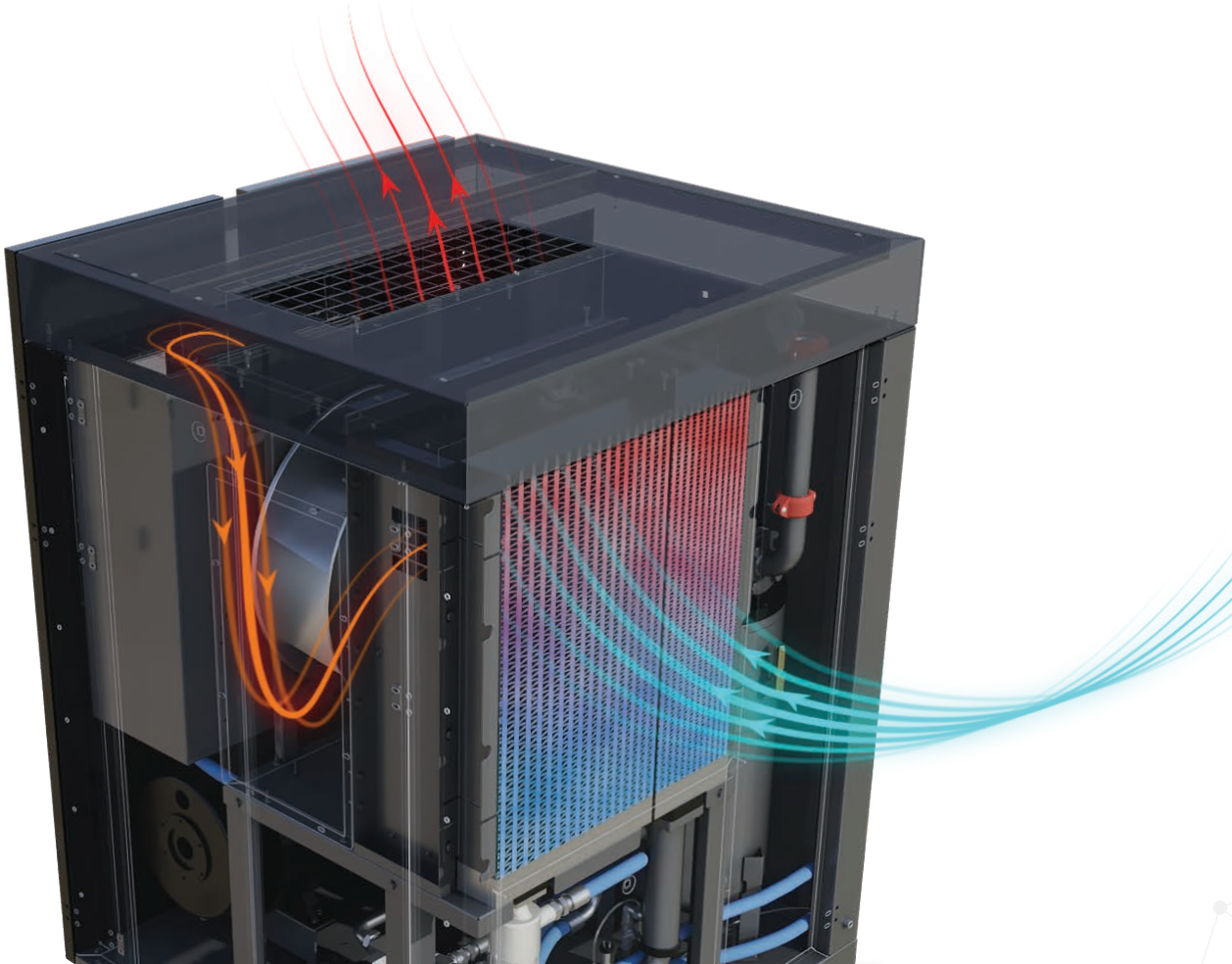

General Features

- IE4 efficiency-class electric motors in fixed speed models
- IE5 efficiency-class IPM electric motors in variable speed models
- Two-stage screw block
- Water cooling (37 kW and above)
- Variable and fixed speed motor power options
- Soft start with variable speed power transmission
- Heat recovery (optional)
- Operating with low noise level
- Integrated dryer (optional)

Heat Recovery Options For Even More Savings

- In compressor, a high amount of heat is released during the compression of the air.
- A large amount of heat is recovered with a suitable oil/water exchanger placed at the oil tank outlet of the compressor. The hot water obtained with the heat recovery can be used in many areas in your facilities.
- By directing the hot air coming out of the compressor, a room can be heated when heating is required, or hot air can be given outside with thermostatic control, in accordance with seasonal changes. In this way, savings from the heating system and natural gas are provided.
- 80% of the compressor's total energy consumption can be recovered.

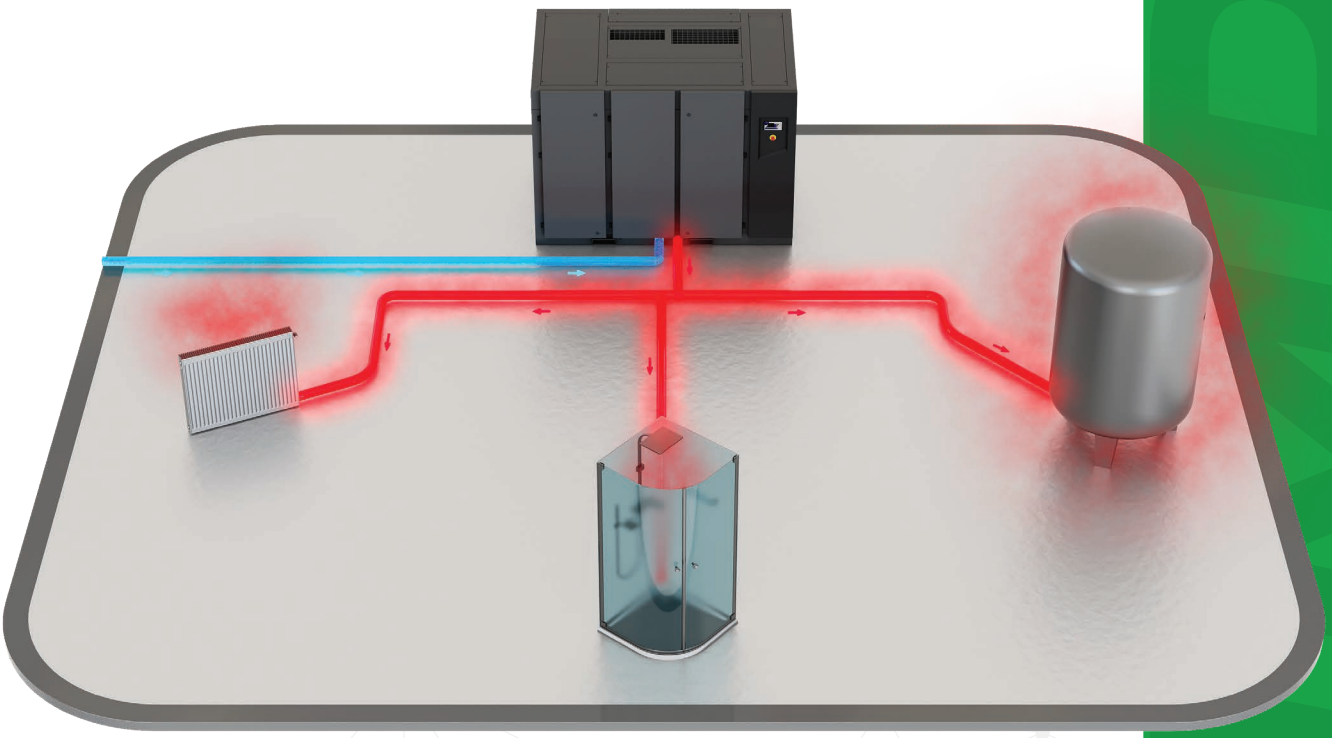

What is VSD Technology?

Some of industrial operations, the demand for compressed air is variable.

In such conditions our compressors automatically adjust the compressor's operating speed to match air production to demand in real time, saving significant amounts of energy.

A traditional fixed speed air compressor can only operate at full capacity. Fixed speed compressors consume a lot of energy when less air is required and some of the energy is wasted.

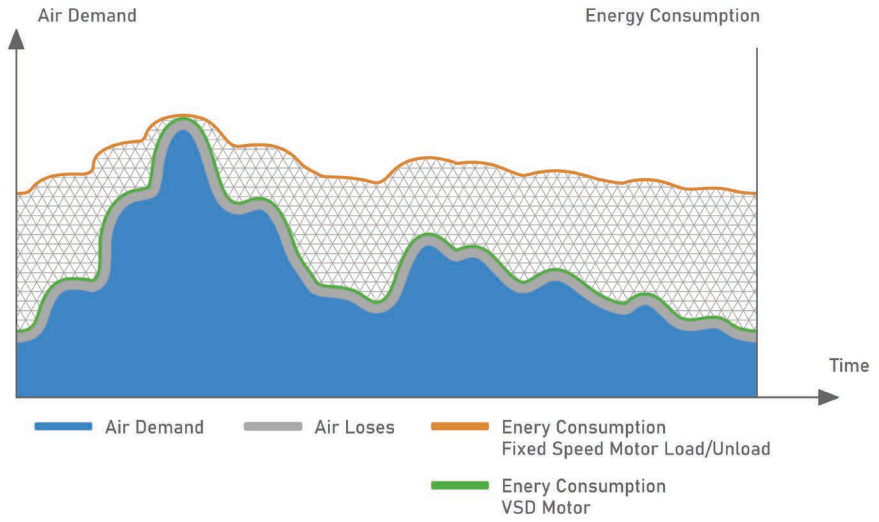

Why Hertz VSD?

- Whereas VSD compressor works only according to the amount of need, it reduces the energy cost.
- There is no need to unload, which saves both time and energy.
- Air system pressure is more consistent and also lower, minimizing energy consumption and air leaks.
- Motor and inverter are specially designed to provide maximum efficiency.
- The motors have successfully passed tests performed in the harshest conditions such as high temperature and high pressure.
- Variable speed compressors vibrate less than the other models used in the market.

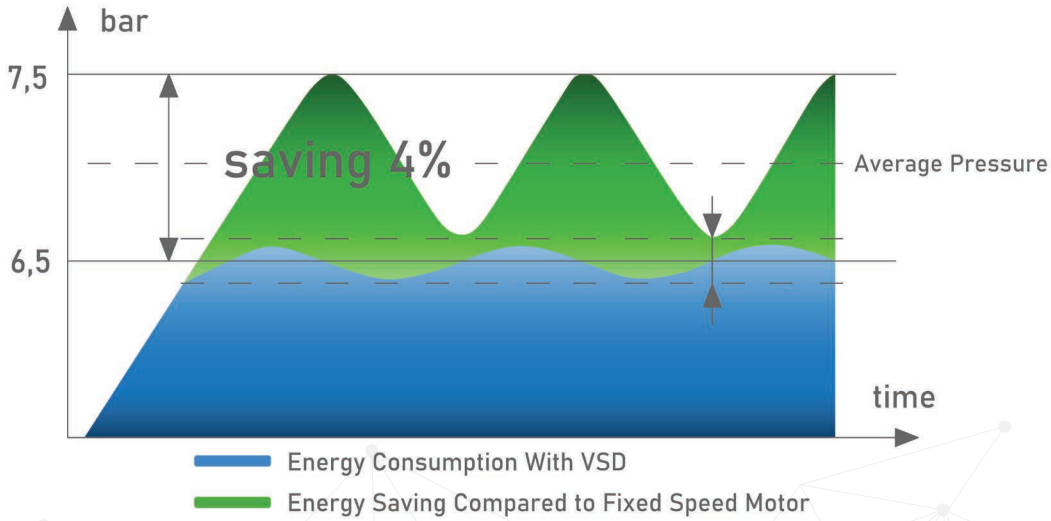

up to **65%***
energy savings

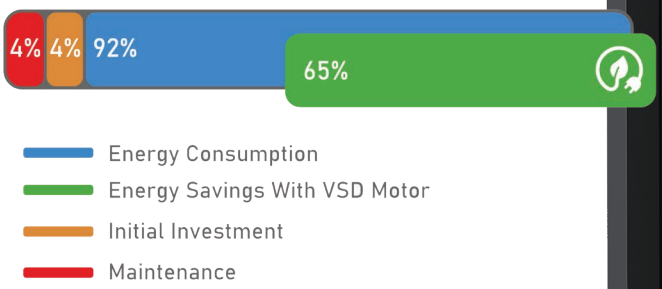

*Electric Motor Drive**

- The drive and IMP meet the requirements of IES2 (EN50598)
- Functionality in a single unit
- Uses fewer components
- Long service life helps minimize environmental impact

*Applicable for variable speed models.

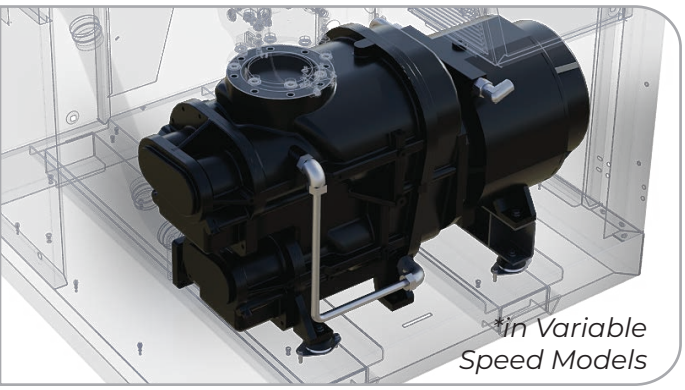

**in Variable Speed Models*

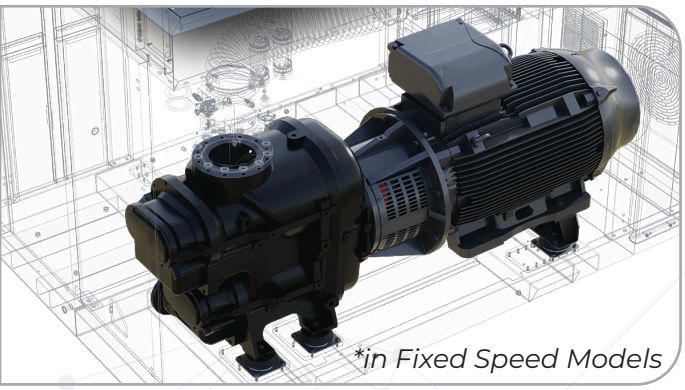

**in Fixed Speed Models*

Electric Motor

In Fixed Speed Models;

- IE4 energy efficiency-class electric motors
- Optimised air cooling
- Motors have B-class temperature increase

In Variable Speed Models;

- Ultra Premium IE5 energy efficiency-class electric motors
- Internal Permanent Magnet Motor (IPM)
- Compact design
- F-class insulation
- Optimum oil cooling at all speeds for high efficiency
- Grease-free lubricated motor bearings

Screw Block

- Direct coupled
- Two-stage screw produces energy efficiency by up to 10%
- Higher flow rate by up to 10% with two-stage screw
- With two-stage compression near isothermal compression
- Compact design with no power transmission element requirement in variable speed models
- Zero transmission losses by compact direct power transmission in variable speed models
- Thanks to low compression rate low axial and compression forces between screw blocks
- Thanks to low rotor speeds, a long service life
- Reliable operation thanks to elastomer coupling on fixed speed models
- Low noise and vibration levels

Intake Chamber

- High acoustic performance in noise dampening
- Insulated cold air intake for energy efficiency

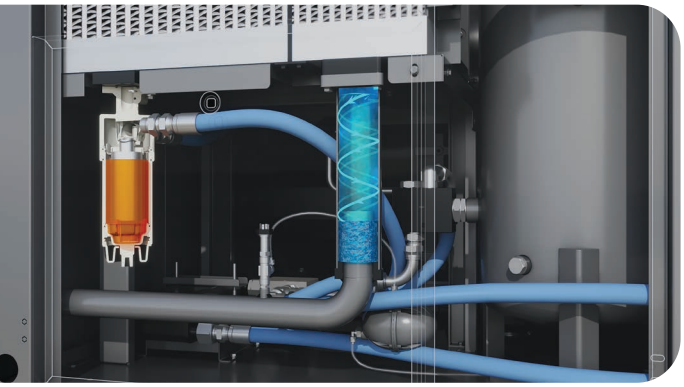

Cooling System

- High cooling efficiency in compact air and oil heat exchangers
- Suitable design for operating up to 45°C
- Radial fan for high cooling efficiency (37 kW and above)
- Low noise level with low speed radial fans
- Cooling fan driver for maximum energy efficiency

Air Filter

- Two-stage filtration (Initial filtration/precision filtration)
- 99.9% efficiency in particle separation down to microns
- Low pressure loss (starting pressure fall<3mbar)
- Easy maintenance
- Long service life

Oil Filter

- Non-metallic, environmentally friendly and recyclable oil filter
- Aluminium housing
- Easy maintenance
- Compact design

Separator System

- Effective separator elements keep the amount of oil in the outlet air low (1-3 mg/m³) for high-quality compressed air
- Sep-n-sep type separator with enlarged surface area
- Easy to service
- High efficiency three stage air-oil separation system

Water Separator

- Compact, integrated, and unique design
- Separation performance is %99 even in very hot and humid conditions
- High energy efficiency with minimal pressure loss

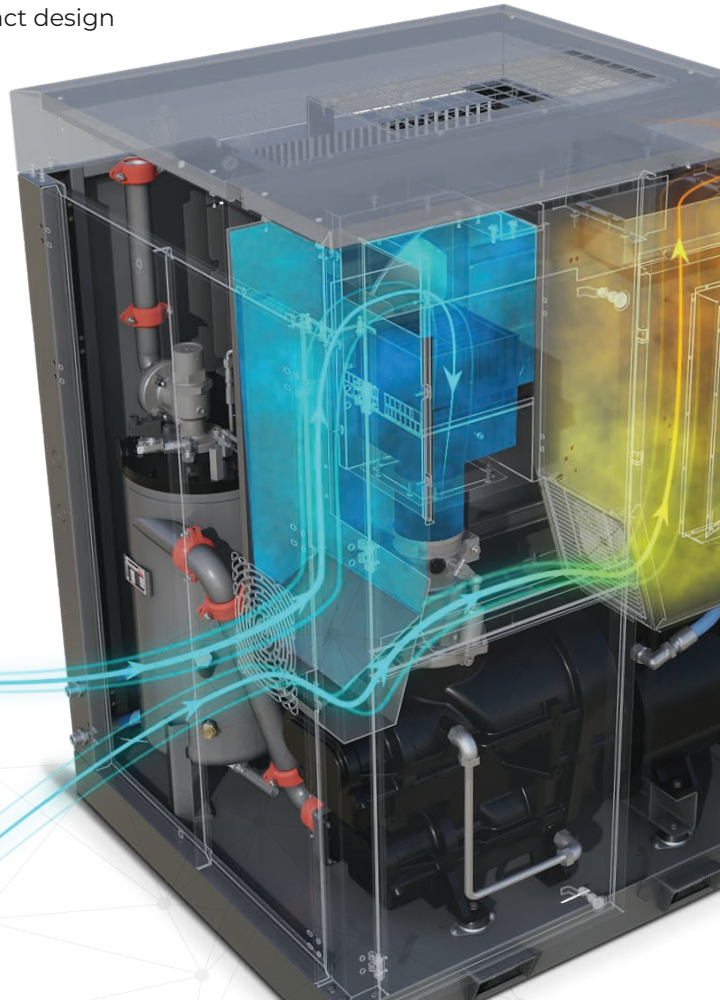

Maintenance and Service

- The compressor's key components are specially designed to make servicing easy.
- Maintenance friendly internal design.
- Oil filter and air filters can be replaced easily
- The compressor oil cools the motor and lubricates the bearings so, no extra lubrication and maintenance are needed.
- Low-speed rotors produce less vibration and noise.
- Compact IPM motors keep the machine size small. This creates great advantages for unit placement.

Controller

In Fixed Speed Models;

- Without the need for an external main controller, ability to work synchronized for up to 5 compressors
- Weekly scheduler for starting / stopping the machine at 3 different time intervals can be individually set for each day of the week
- Internal ModBus communication
- User-friendly on-screen interface
- Alarm log records the last 20 alarms
- Periodic maintenance warnings and log records

In Variable Speed Models;

- 7" LED Display
- Group operation of up to 4 compressors
- Compact construction with integrated driver and controller
- Fast communication with ModbusTCP
- Ability to connect to customer DCS system via ModbusTCP
- Weekly scheduler for starting/stopping the machine at 2 different time intervals can be individually set for each day of the week
- Dual PID feature can run simultaneous PID for temperature and pressure
- Pressure PID ensures energy-efficient operation by maintaining the pressure at the desired level
- Temperature PID controls the fan speed to maintain the screw block's most efficient operating temperature
- All inverter and compressor control data are managed from a single point
- Possibility to choose Master/Slave compressor
- Ability to determine co-aging times of the system with selectable parameters
- Built-in phase sensor
- User-friendly on-screen interface

Certification

- Motor and driver meet the requirements of IEC2 (EN50598) and CE certificates

Model	Pressure		Capacity*				Motor Power	Connection Size	Dimensions (mm)			Controller	Weight	Noise
			Minimum		Maximum									
	bar	psi	m³/min	cfm	m³/min	cfm	kW/hp		Length	Width	Height		kg	dB (A)
IMPETUS VSD 22	7,5	110	1,03	36	4,35	154	22/30	G 1 1/4"	955	1095	1580	Smartronic Pro	750	72
	8,5	125	1,04	37	4,17	147								
	10	145	1,03	36	3,76	133								
IMPETUS VSD 30	7,5	110	1,64	58	6,36	225	30/40	G 1 1/4"	955	1095	1580	Smartronic Pro	875	72
	8,5	125	1,62	57	5,91	209								
	10	145	1,59	56	5,41	191								
IMPETUS VSD 37	7,5	110	1,79	63	7,76	274	37/50	G 1 1/2"	1195	1250	1860	Smartronic Pro	1220	71
	8,5	125	1,79	63	7,27	257								
	10	145	1,77	63	6,52	230								
IMPETUS VSD 45	7,5	110	2,33	82	9,30	329	45/60	G 1 1/2"	1195	1250	1860	Smartronic Pro	1400	72
	8,5	125	2,31	82	8,73	308								
	10	145	2,30	81	8,01	283								
IMPETUS VSD 55	7,5	110	2,62	93	11,60	410	55/75	G 2"	1400	1450	1965	Smartronic Pro	1620	72
	8,5	125	2,56	90	10,85	383								
	10	145	2,55	90	9,54	337								
IMPETUS VSD 75	7,5	110	3,57	126	16,01	565	75/100	G 2"	1400	1450	1965	Smartronic Pro	1760	72
	8,5	125	3,63	128	15,27	539								
	10	145	3,55	125	13,22	467								
IMPETUS VSD 90	7,5	110	5,21	184	18,95	669	90/125	DN65	1805	2775	1926	Smartronic c300	2846	75
	8,5	125	5,21	184	17,99	635								
	10	145	5,18	183	16,46	581								
IMPETUS VSD 110	7,5	110	6,72	237	23,1	817	110/150	DN65	1805	2775	1926	Smartronic c300	3230	74
	8,5	125	6,82	241	22	777								
	10	145	6,62	34	20,2	711								

Model	Pressure		Capacity*		Motor Power	Connection Size	Dimensions (mm)			Weight	Noise
	bar	psi	m³/min	cfm	kW/hp		Length	Width	Height	kg	dB (A)
IMPETUS 22	7,5	110	3,93	139	22/30	G 1 1/4"	990	1670	1580	1055	70
	8,5	125	3,36	119							
	10	145	3,39	120							
	13	190	2,54	90							
IMPETUS 30	7,5	110	5,91	209	30/40	G 1 1/4"	990	1670	1580	1220	70
	8,5	125	5,07	179							
	10	145	5,08	179							
	13	190	4,3	151							
IMPETUS 37	7,5	110	7,08	250	37/50	G 1 1/2"	1345	1905	1860	1790	63
	8,5	125	7,07	250							
	10	145	6,07	214							
	13	190	5,19	183							
IMPETUS 45	7,5	110	8,94	316	45/60	G 1 1/2"	1343	1905	1860	2060	63
	8,5	125	8,79	310							
	10	145	7,79	275							
	13	190	6,66	235							
IMPETUS 55	7,5	110	10,97	388	55/75	G 2"	1565	2220	1965	2220	66
	8,5	125	10,96	387							
	10	145	8,8	311							
	13	190	7,58	268							
IMPETUS 75	7,5	110	14,98	529	75/100	G 2"	1565	2220	1965	2590	70
	8,5	125	13,98	494							
	10	145	12,59	445							
	13	190	9,99	353							

- Unit performances measured in reference conditions which are 1 bar absolute air Pressure, %0 relative humidity, 20°C inlet air temperature.

- Hertz reserves its rights to make changes in its products and specifications without prior notice.

* Refers to free air delivery measured according to ISO 1217:2009, Annex E and C standard.

HERTZ KOMPRESSOREN GLOBAL
export@hertz-kompressoren.com
www.hertz-kompressoren.com

HERTZ KOMPRESSOREN GmbH
Kronacherstr. 60, 96052 Bamberg
Tel: +49 951 96 43 13 88 Fax: +49 951 96 43 13 50
info@hertz-kompressoren.de

HERTZ KOMPRESSOREN USA Inc.
11910 Mount Holly-Huntersville Road
Huntersville, NC 28078 USA
Tel : +1 704 579 59 00 - info@hertz-kompressoren.us